NOTES:

1.0 ELECTRICAL SPECIFICATIONS:
- 1.1 FREQUENCY RANGE: 2.0 to 18.0 GHz
- 1.2 INSERTION LOSS: 1.5dB MAX.
- 1.3 ISOLATION: 15dB MIN.
- 1.4 VSWR (MAX): 1.80:1
- 1.5 OUTPUT UNBALANCE:
  - AMPLITUDE: 0.40dB MAX.
  - PHASE: 10° MAX.
- 1.6 MAX. INPUT POWER:
  - 10 WATTS CW THROUGHOUT THE FREQ. RANGE WITH A LOAD VSWR OF 2:1 MAX.
- 1.7 IMPEDANCE: 50 OHMS
- 1.8 TEMPERATURE RANGE:
  - −65°C to +125°C

2.0 FINISHING:
- 2.1 GREY PER MIL−E−15090 TYPE II, CLASS 2
  - OVER MIL−C−5541 CLASS 3A
  - MEETS MIL−F−14072
  - MEETS MIL−E−5400
- 2.2 MARKING: MARK UNIT AS SHOWN

3.0 DIMENSIONS IN PARENTHESIS ARE IN MILLIMETERS.

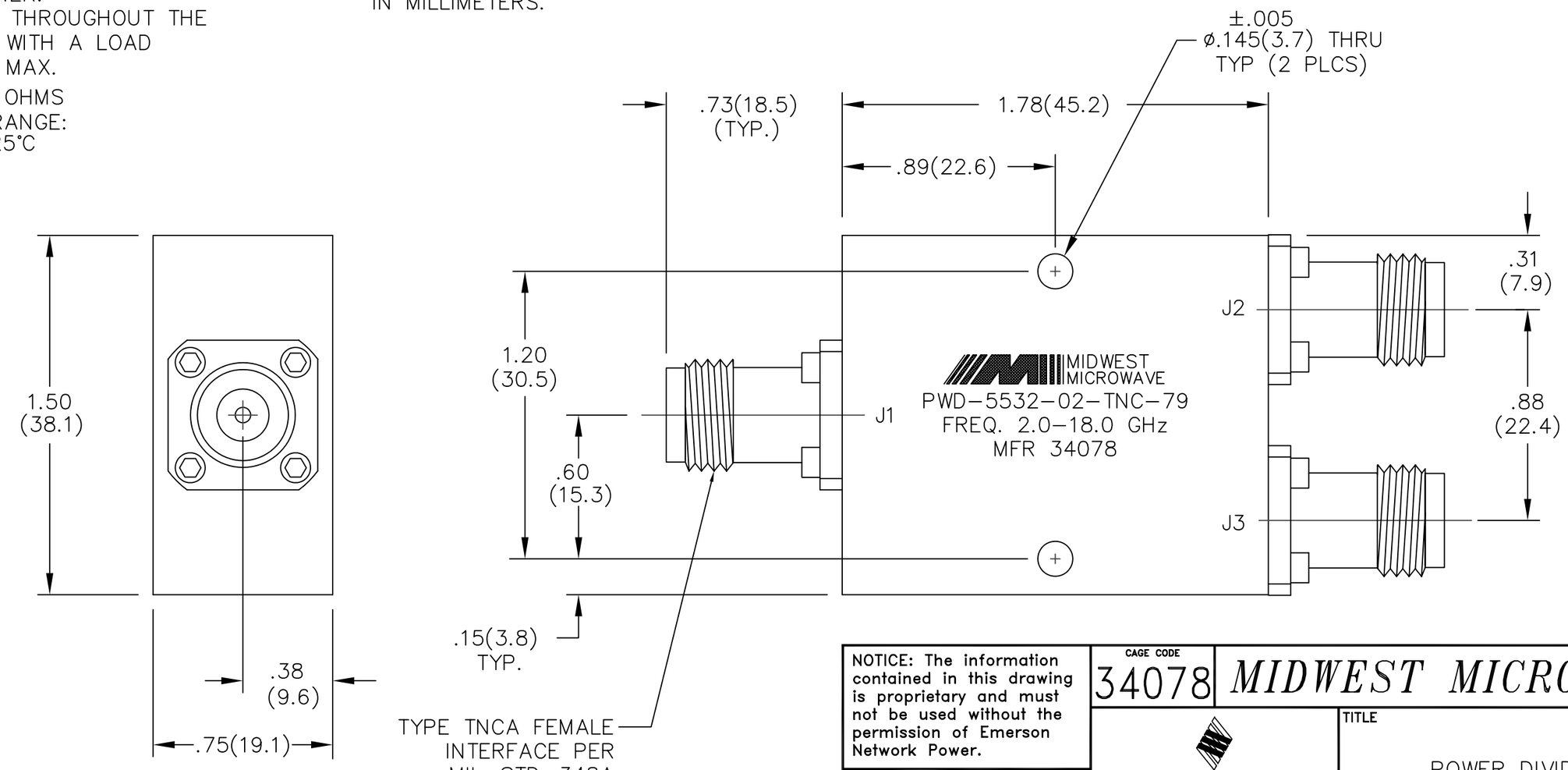

MODEL NUMBER
PWD−5532−02−TNC−79

REV.	DESCRIPTION	DATE
–	RELEASED	11/3/96
−1	ADDED TITLEBLOCK	7/20/05
A	ECN 20777	3/23/06
C	ECO 22746	10/27/10
D	ECO 23013	12/15/10

NOTICE: The information contained in this drawing is proprietary and must not be used without the permission of Emerson Network Power.

UNLESS OTHERWISE NOTED DIMENSIONS ARE IN INCHES AND TOLERANCES ARE:
3 PLACE DECIMALS ±.005
2 PLACE DECIMALS ±.02
FRACTIONS ±1/64
PARALLELITY: T.I.R. _____
FLATNESS: T.I.R. _____
CONCENTRICITY: T.I.R. _____
ANGLES AND PERPENDICULARITY: ±1°

CAGE CODE 34078

MIDWEST MICROWAVE

EMERSON Network Power
Connectivity Solutions

TITLE: POWER DIVIDER OUTLINE DRAWING

DRAWN/DATE	ENG./DATE	DRAWING NUMBER	REV.
A.BEATTY 3/13/96	J.O'NEIL 3/19/96	PWD−5532−02−TNC−79−01	D
CHECKED/DATE	APPROVED/DATE	SCALE: 5=1	SHEET 1 of 1