CATALOG # 10VB6		
ECO #	APPRVD.	DATE
	KAW	30NOV06

SAFETY ORGANIZATIONS

THIS FILTER HAS BEEN FORMALLY RECOGNIZED, CERTIFIED OR APPROVED BY THE LISTED AGENCY. THEREFORE, ALL TEST/REQUIREMENTS SPECIFIED IN THE LATEST REVISION OF THE FOLLOWING AGENCY STANDARDS HAVE BEEN MET:

UL RECOGNIZED: UL 1283
CSA CERTIFIED: CSA 22.2, # 8
VDE APPROVED: EN 133200

OPERATING SPECIFICATIONS

LINE CURRENT/VOLTAGE: 10 AMP/40°C, 120/250VAC

LINE FREQUENCY: 50-60Hz

MAXIMUM LEAKAGE CURRENT,
EACH LINE TO GROUND: 0.40mA @ 120V, 60Hz
0.70mA @ 250V, 50Hz

OPERATING AMBIENT TEMP. RANGE: -10°C TO +40°C @ RATED CURRENT, I_r.

IN AN AMBIENT, T_a, HIGHER THAN 40°C, THE MAXIMUM OPERATING CURRENT, I_o, IS AS FOLLOWS:

$$I_o = I_r \sqrt{\frac{100 - T_a}{60}}$$

RELIABILITY SPECIFICATIONS:

STORAGE TEMPERATURE: -40°C TO +85°C
HUMIDITY: 21 DAYS @ 40°C 95% RH.
CURRENT OVERLOAD TEST: 6 TIMES I_r FOR 8 SECONDS

TEST SPECIFICATIONS:

INDUCTANCE: 0.495mH NOMINAL
CAPACITANCE: (MEASURED @ 1KHz, 0.250VAC MAX., 25°C±1°C)
LINE TO GROUND: 0.0089µF ±20%
LINE TO LINE: 0.012µF ±20%
DISCHARGE RESISTOR: 1.5MΩ
L/G AND L/L I.R.
NO DISCHARGE RESISTOR: 6000MΩ (MIN.) @ 100VDC, 20°C AND 50% RH

RECOMMENDED RECEIVING INSPECTION HIPOT:

LINE TO GROUND: 1500VAC 2250VDC FOR 1 MINUTE
LINE TO LINE: 1450VDC FOR 1 MINUTE

FILTER APPROVAL:

THE BEST WAY TO SELECT AND QUALIFY A FILTER IS FOR YOUR ENGINEERING TO TEST THE UNIT IN YOUR EQUIPMENT.

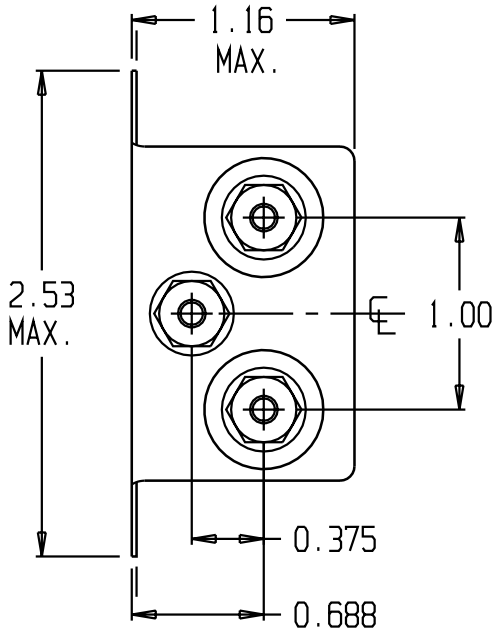

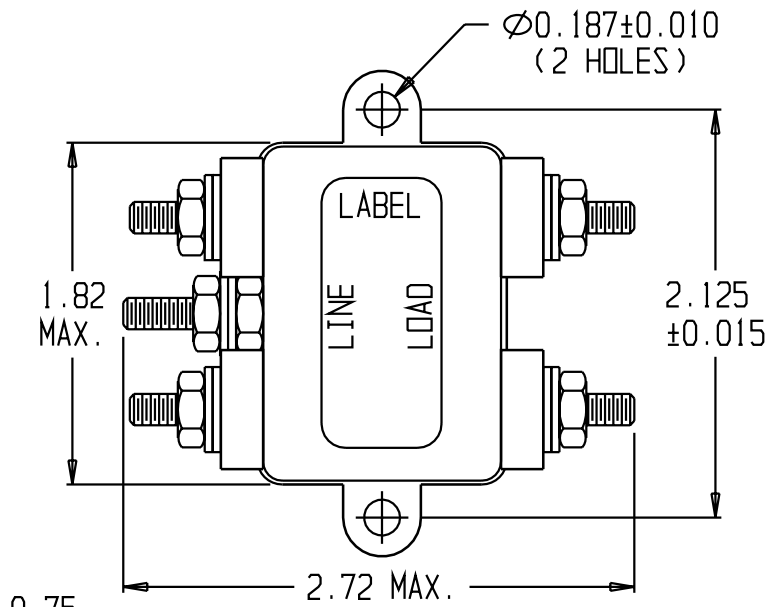

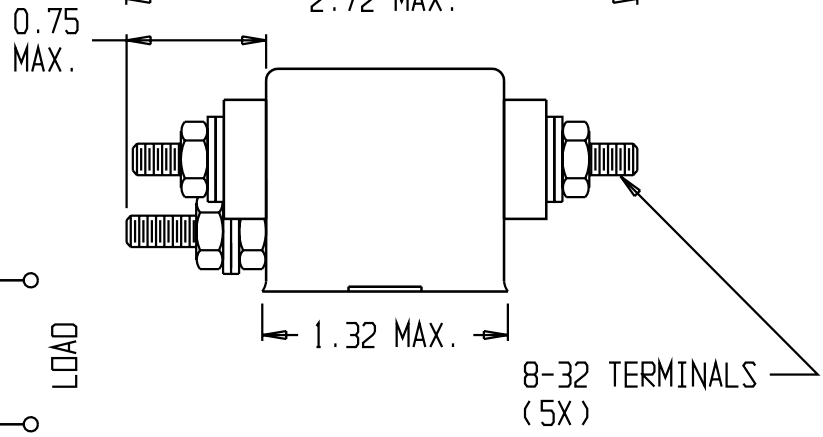

TORQUE: 18±2 IN-LBS

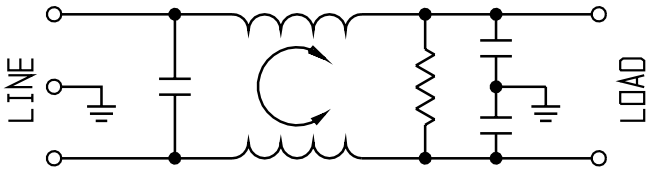

50Ω- 50Ω(MINIMUM) INSERTION LOSS											
FREQUENCY MHz	0.15	0.5	1.0	2.0	5.0	10	20	30			
COMMON dB	12	26	34	38	43	48	54	54			
DIFF. dB											

THIRD ANGLE PROJECTION

UNLESS OTHERWISE SPECIFIED, TOLERANCE TO BE ±.025
MATERIAL & FINISH: AS SUPPLIED

This document is proprietary to CORCOM INC. and is not to be reproduced nor used for manufacturing purposes except on CORCOM'S prior written consent.

tyco Electronics corcom
620 S. BUTTERFIELD ROAD MUNDELEIN IL 60060

CUSTOMER DRAWING 10VB6

TYCO: 1-6609021-2

SCALE: NTS	DATE: 12SEP89	CATALOG NO.	REV.
DRW. BY: JF	ORIG: CW	10VB6	B