FCIconnect.com

PRODUCT NUMBER	PITCH
KDxx30x100J0G	3.81 mm

Dim P=(N-1)×3.81
Dim L=N×3.81+0.39
Dim A=N×3.81+10.39
Dim B=(N-1)×3.81+9.0

N=Number of poles

POLES	Dim P	Dim L	Dim A	Dim B
2p-6p	±0.15	±0.15	±0.15	±0.15
7p-12p	±0.20	±0.25	±0.25	±0.25
13p-16p	±0.25	±0.30	±0.30	±0.30
17p-24p	±0.30	±0.40	±0.40	±0.40

PART NO.: KD xx 3 0 x 1 00J0 G

Solid block
No. of poles
02 2 poles
03 3 poles
... ...
24 24 poles

Color
0 Black (RAL9005)
2 Red (RAL3001/D)
3 Orange(RAL2011/P)
4 Yellow(RAL1018/A)
5 Green(RAL6018/T)
6 Blue (RAL5015/A)
8 Grey(RAL7035/D)
9 White(RAL1102)
C Green(RAL6018/U)

RoHS compliant
(lead<4%)
In copper Alloy

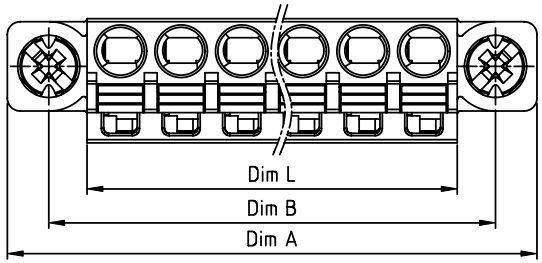

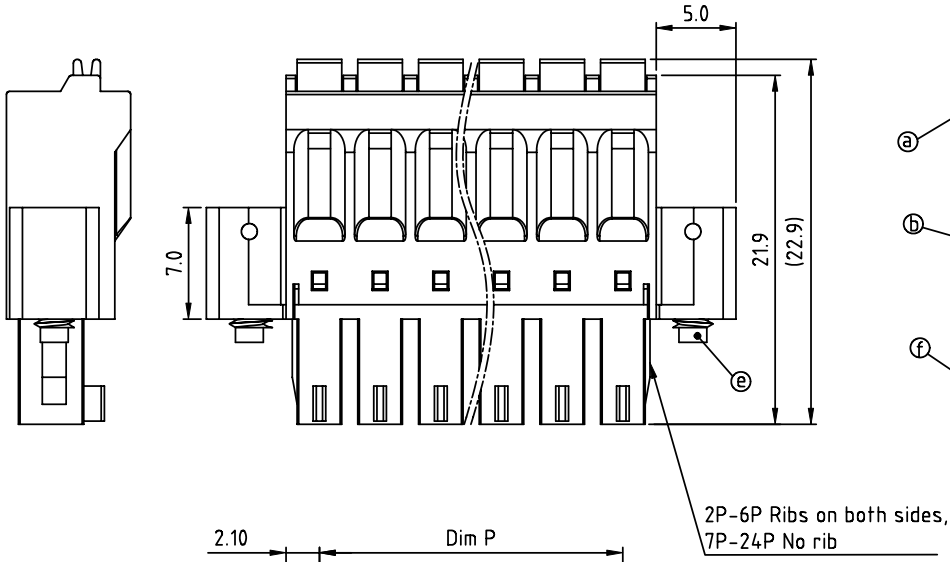

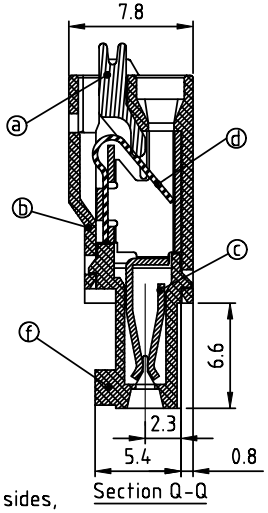

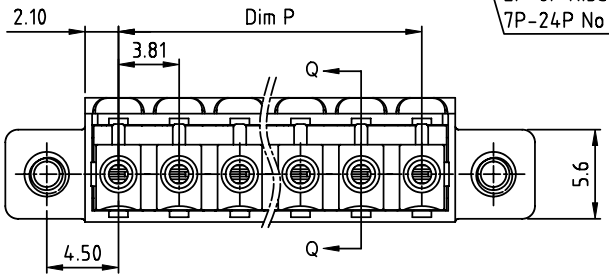

Material:
- Item ⓐ Terminal lever:Thermoplastic (UL94V-0) Orange (RAL2001/P)
- Item ⓑ Top body:Thermoplastic (UL94V-0)
- Item ⓒ Female contact :PhBz Tin Plated
- Item ⓓ Spring clamp: Stainless steel
- Item ⓔ Flangle screw: M2.5 Steel, Zinc plated
- Item ⓕ Bottom body: Thermoplastic (UL94V-0)

Electrical:	cULus
Voltage rating:	300 V
Current rating:	5.5 A
Wire range:	
Solid wire(AWG):	16-24
Stranded wire(AWG):	16-24
Wire strip length:	9-10 mm
Withstanding Voltage:	1.6 KV
Operating temperature:	-40°C to +115°C
Safety Approval:	c UL us

mat'l. code				surface ASME Y14.5	tolerance ASME Y14.5	projection	product family TERMINAL BLOCK
ltr	ecn no	dr	date	tolerances unless otherwise specified			title
				angles X°±1°	linear X.±0.5 / X.X±0.3 / X.XX±0.1	MM	TERMINAL BLOCK
						scale	SPRING CLAMP,PLUGGABLE PLUG,WITH FLANGE
				dr	EVIN ZHONG 052014	FCI	dwg no KDxx30x100J0G sheet 1 of 1 size A4
				engr	EVIN ZHONG 052014		
				chr	HANKE FENG 052014		
				appd	SHI JUN 052014		type CUSTOMER Drawing
sheet index	revision	A					
	sheet	1					